File Class:	Li-ion Polymer Battery Pack Specification Sheet	Version:	3.0
File Name:	Li-ion Polymer Rechargeable Battery Specification Sheet	Manufacturer：	Honcell Energy
Standard:	Compliant with RoHS, CE, FCC, UN38.3, REACH,KC,PSE IEC62133(TUV-CB), UL1642/2054 & GB31241-2014	Date:	2018-06-20

Li-ion Polymer Rechargeable Battery Specification Sheet

Customer's Model Number: HCP417796NFC

Honcell's Model Number: HCP417796NFC

Voltage / Capacity: 3.7V 3000mAh

Prepared By	Checked By	Approved By
Date:	Date:	Date:

Customer Approval

Comment: (Please return one copy with your approvals)

Signature: Date:

Shenzhen Honcell Energy Co., Ltd.
612, Bldg. A, Weidonglong Industrial Zone,
Meilong Ave.194#, Longhua New District,
Shenzhen, 518109, China.
[t] +86-755-21005221 info@honcell.com
[f] +86-755-21000249 www.honcell.com

Copyright ©2010-2018 Honcell Energy. All Rights Reserved.

CONTENT

1. Modified List……..……..3

2. Scope ……...…….. 4

3. Bare Cell Parameters ……..……..…… ……..……4

4. Mechanical Specifications of Bare Cell …… …….. 5

5. Safety Testing for Bare Cell……..…... 5

6. Battery Reliability……..……..……..……..……..…… 6

7. The Requirements of Measurements and Instrumentations……..…... ……... 6

8. BOM of Battery Pack and Mechanical Drawing……..…… 7

9. Nomenclature …….……..... ... . ….7

10. Storage……..……..... 8

11. Protection Circuit Module (PCM)……8-9

12. Packing... ... ... …….....…... 10

13. Curves……11

14. Appendix…… 12-17

Copyright ©2010-2018 Honcell Energy. All Rights Reserved.

1. Modified List

Revision	Date	Mark	Modifications	Approved
ED-RE-0	2018-06-20		New Release	√

Copyright ©2010-2018 Honcell Energy. All Rights Reserved.

2. Scope

This specification sheet describes the basic performances, technical requirements, testing methods, warnings and cautions of the Li-ion polymer rechargeable battery. The specification sheet only applies to the products provided by Honcell Energy.

3. Electrical Parameters:

No.	Item	Spec.	Remark
1	Capacity	Typ. 3020 mAh	at 0.2C Discharge
		Min. 3000 mAh	at 0.2C Discharge
2	Rated Voltage	3.7V	Cell voltage between 3.7V to 3.99V before shipping
3	Discharge Cut-off Voltage	3.0 V	
4	Charge Cut-off Voltage	4.20V	
5	Impedance	Max.: 140mΩ	Measure the internal resistance with AC=1kHz (since wave) after standard charge, 50% SOC.
6	Charge Current	Standard Charge	0.2C
		Continuous Current	0.5C Max.
		Peak Current	1.0C Max.
7	Discharge Current	Standard Discharge	0.2C
		Continuous Current	1.0C Max.
		Peak Current	2.0C Max,2-3msMax
8	Standard Charging Method	CC (constant current)	CC @0.2C charges to 4.20V, then @CV charges till charge current declines to ≤0.01C
		CV (constant voltage)	
9	Self-discharge	>95% Initial Capaicty (bare cell) >90% Initial Capaicty(cell+PCM)	Store the cells at 23±2℃ for 1 month after standard charge, then discharged@0.2C to cut off voltage
10	Cycle Life	≥500 times	CC @ 0.2C charges to 4.20V, and then CV charges to current declines to 0.02C. In 5 Mins., CC @0.2C discharged to 3.0V. In 10 mins, repeat continuously till discharging capacity is less than 80% initial capacity.
11	Capability of Keeping Electricity	≥260min	23±2℃, after standard charging, laying the battery 28 days, discharged at 0.2C to cut off voltage, recording the discharging time.
12	Operating Temperature	Charge: 0 ℃ to +45℃ Discharge: -20 ℃ to +60℃	
13	Storage Temperature	23±2℃	-20℃ ~ +45℃ , within 1 month≥90%;within3month ≥85% ;within 12month≥80%; Recommend storage : 23±2℃
14	Storage Humidity	≤75% RH	
15	Pack Weight	Approx. 77.59g	
16	Appearance	No scratch, distortion, contamination and or leakage	Visual Inspection:At the best viewing distance (400 mm) and the appropriate lighting conditions,more than 750 lx (illumination) should have normal vision (1.2 or above) and color resolution, each time not more than 5 seconds.
17	Standard Condition	Temperature	15℃-35℃
		Humidity	45-75%RH
		Atmospheric Pressure	86-106 kPa

Copyright ©2010-2018 Honcell Energy. All Rights Reserved.

4. Mechanical Specifications of Bare Cell

No.	Item	Testing Condition and Method	Criteria
1	Drop	After standard charging, the cell is to be dropped from a height of 1.2meter onto a thickness of 20mm board, dropped once in the positive and negative directions of three mutually perpendicular X, Y, Z axes.	No fire, no explosion, no leakage, no smoke.
2	Vibration	Fixed the fully charged cell to vibration table and subjected to vibration cycling that the frequency is to be varied at the rate of 1Hz per minute between 10Hz and 55Hz, the excursion of the vibration is 0.8mm. The cell shall be vibrated for 90 ~100 minutes per axis of XYZ axes.	No fire, no explosion, no leakage
3	Impact & Crush Test	Impact between bar (15.8mm diameter) and 9.1kg falling material (at a height of 6.1cm). Bar is laid across the center of the test sample. Crush between two flat plates. Applied force is about 13kN.	No fire, no explosion
4	Collision Test	Installed the battery onto the vibration desk with clamps. Equipment parameters of frequency \ time \times are as follows : acceleration: 100m/s2; frequency: 40~80times/min; pulse duration: 16ms ; impact times: 1000±10.	No deformation, no fume, no explosion; the voltage should be more than 3.6V
5	Needling	A cell is fully charged in consistant current of 1C5A , impale the battery with stainless steel needle with diameter 5mm on the biggest flat surface of the battery ,impaling speed should be more than 40mm/s.	No fire, no explosion

5. Safety Testing for Bare Cell

No.	Item	Testing Condition and Method	Standard
1	Over Charge Testing	After discharge to limit voltage, charged at constant current of 3C and constant voltage of 4.6V, While voltage reaches to the max ,if charging continued over 7 hours or temperature is 20% less than the top , close the test .	No fire, no explosion
2	Over Discharge Testing	At 23±5℃, 1C Constant discharge , keep 6h.	No fire, no explosion
3	Short Testing	After full charging ,short circuit be done with 0.1Ω, then disconnect it and then instantly charge it for 5S.	No changes on apperance (leak,swell, fume, etc) the voltage is not less than 3.7V after Instantaneous being charged.
4	Forced discharge	Battery + 10 v power supply and electronic load or conditions considerable resistance in series, with 1C5A electric constant exile.Trials in 23 + 2 ℃ ambient temperature for 12 h.Even after the battery voltage reaches 0 V, test shall be continued.	No obvious change in appearance.

Copyright ©2010-2018 Honcell Energy. All Rights Reserved.

6. Battery Reliability

No.	Inspection Item	Test Method	Standard
1	Discharge at High Temperature	After standard charge, laying the cells 4H at 55±2℃, then discharge at 0.2C to cut off voltage, recording the discharging time and capacity.	No distortion, no rupture , no fire, no smoke or leakage. Discharge time⩾51mins
2	Discharge at Low Temperature	After standard charge, laying the cells 16H at -20±2℃ then discharge at 0.2C to cut off voltage, recording the discharging time and capacity.	No distortion, no rupture , no fire, no smoke or leakage. Discharge time⩾180mins
3	Thermal Shock	After standard charging, put cell in the baking oven and start , the temperature of the oven is to be raised at a rate of 5±2℃ per minute to a temperature of 130±2℃, remain for 30minutes.	No fire, no explosion.
4	Constant Temperature &Humidity	A cell is charged in standard charge method, stored in an ambient temperature of -10±2 ℃ for 16h, then discharged to the cut-off voltage at a constant current of 0.2C5A. After that, fetch out the cell and place it in an ambient temperature of 20±5 ℃ for 2h, then check its appearance.	The discharge time is not less than 3h; No distortion, No rupture

※Above testing of safety characteristics must be performed with protective devices.

7. The Requirements of Measurements and Instrumentations

1: Voltage instrumentation requirements: measuring the voltage meter accuracy no less than 0.5 magnitude.

2: Current instrumentation requirements: measuring the current meter accuracy no less than 0.5 magnitude.

3: Time instrumentation requirements: measuring the time meter accuracy no less than 0.1%.

4: Temperature instrumentation requirements: measuring the temperature meter accuracy no less than 0.5 ℃.

5: Impedance instrumentation requirements: measuring impedance should by sinusoidal alternating (1 kHz) test.

6: Instrument for measuring dimension: accuracy must be more than 0.02mm, measuring rang is 200mm.

7: Instrument for measuring weigth: accuracy must be more than 0.1g, measuring rang is 1.5kg.

8: The voltage of the constant voltage source must be adjusted, and the variation of the voltage must be within ±0.5%.

9: The current of the constant flow source must be constant and adjusted, and the variation of the current must be within ±1% when charging or discharging.

Copyright ©2010-2018 Honcell Energy. All Rights Reserved.

8. BOM of Battery Pack and Mechanical Drawing

8.1 Battery Pack Mechanical Drawing (not in scale)

All the below materials shall be environmental friendly and RoHS compliant (unit: mm)

NO.	Item Name	Model	Qty.
1	Cell	HCP417796	1
2	PCM	SEIKO DAI	1
3	Red Wire (P+)	UL1571-AWG#26	1
4	Black Wire (P-)	UL1571-AWG#26	1
5	Yellow Wire (T)	UL1571-AWG#26	1
6	Connector	Molex-51021-0300	1
7	Insulating Tape	Orange	2
8	Printing	***	***
9	Label	Crossed Wheel Bin	1

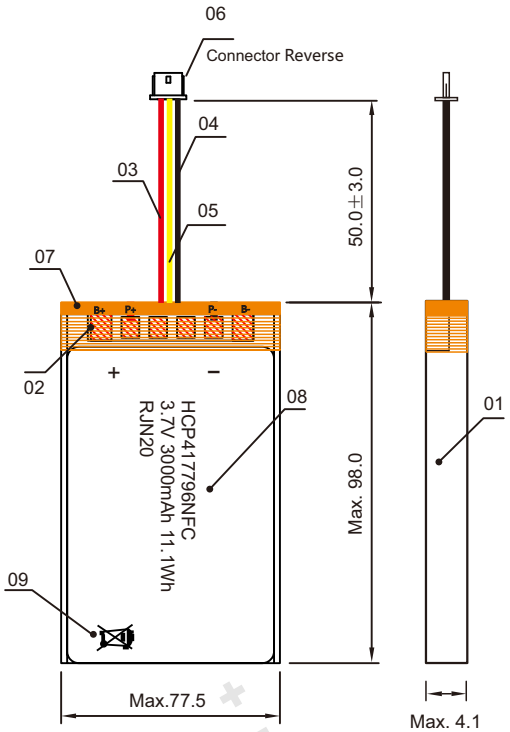

8.2 Bare Cell Mechanical Drawing (Not in Scale)

Dimensions [mm]

Thickness (T)	Max. 4.1(delivery status)	Measured with weighting 300gf at 23±2℃
	Max. 4.4(after cycling)	
Width (W)	Max. 77.0	
Length (L)	Max. 96.0(without tabs)	
Tab Distance (B)	58.5±2.0	
Tab Length (A)	4.0±0.5	
Tab Width (C)	4.0±0.2	
Top Sealing Width (D)	3.0	
Tab Sealant Height (E)	1.5mm for Ref	

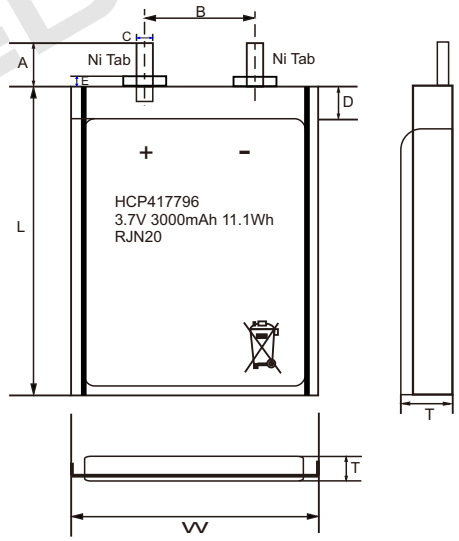

9. Nomenclature

9.1 Model Name Nomenclature

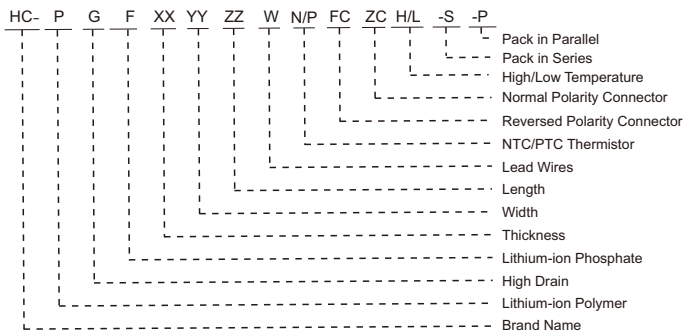

9.2 Date Code Nomenclature

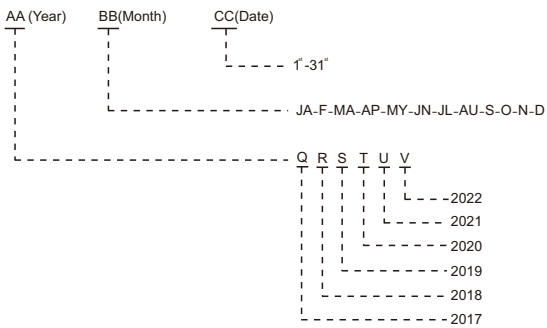

Copyright ©2010-2018 Honcell Energy. All Rights Reserved.

10. Storage

Should the batteries have been stored for 3 months unused, and then transfer them to a dry and cool place. Voltage at storage should be between 3.8V to 3.9V and the storage conditions followed as item 14.4.

11. Protection Circuit Module (PCM)

11.1 PCM Top Layers

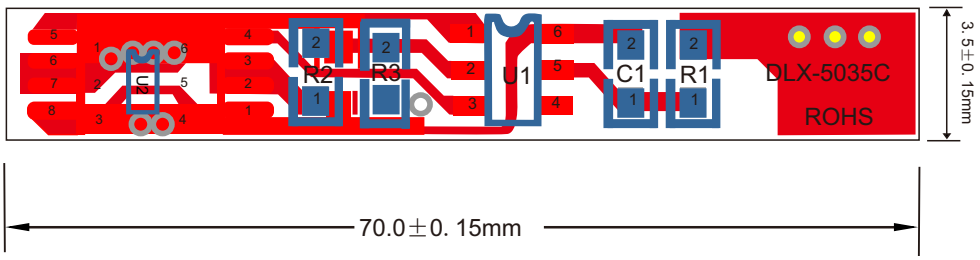

11.2 PCM Bottom Layer and Size

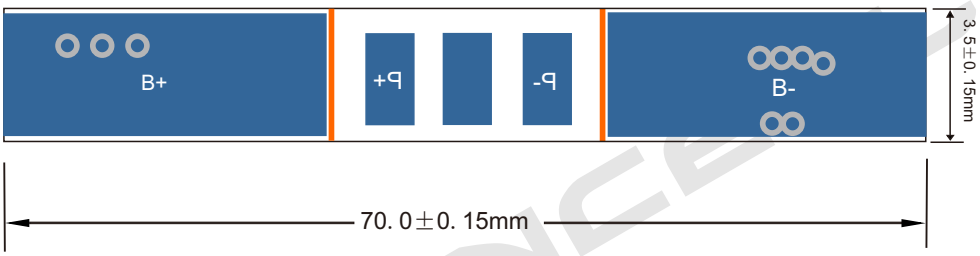

11.3 BOM of PCM

No.	Location	Item	Part Name	Package	Qty.	Supplier/ Remark
1	U1	Protection IC	S-8261DAI-M6T1U	SOT-23-6	1	SEIKO
2	U2,U3	MOSFET	8205A	TSSOP-8	2	MT
3	R1	Resistor	SMD 470Ω±5%	0603	1	YAGEO
4	R2	Resistor	SMD 2KΩ±5%	0603	1	YAGEO
5	C1	Capacitor	SMD 0.1μF±20%	0603	1	YAGEO
6	R3	NTC	SMD 10KΩ±1% B=3435K	0603	1	YAGEO
7	PCB	PCB	(70.0*3.5*0.6)±0.15mm LxWxT		1	ASSUN/FR4 RoHS

Copyright ©2010-2018 Honcell Energy. All Rights Reserved.

11.4 PCM Application Schematic

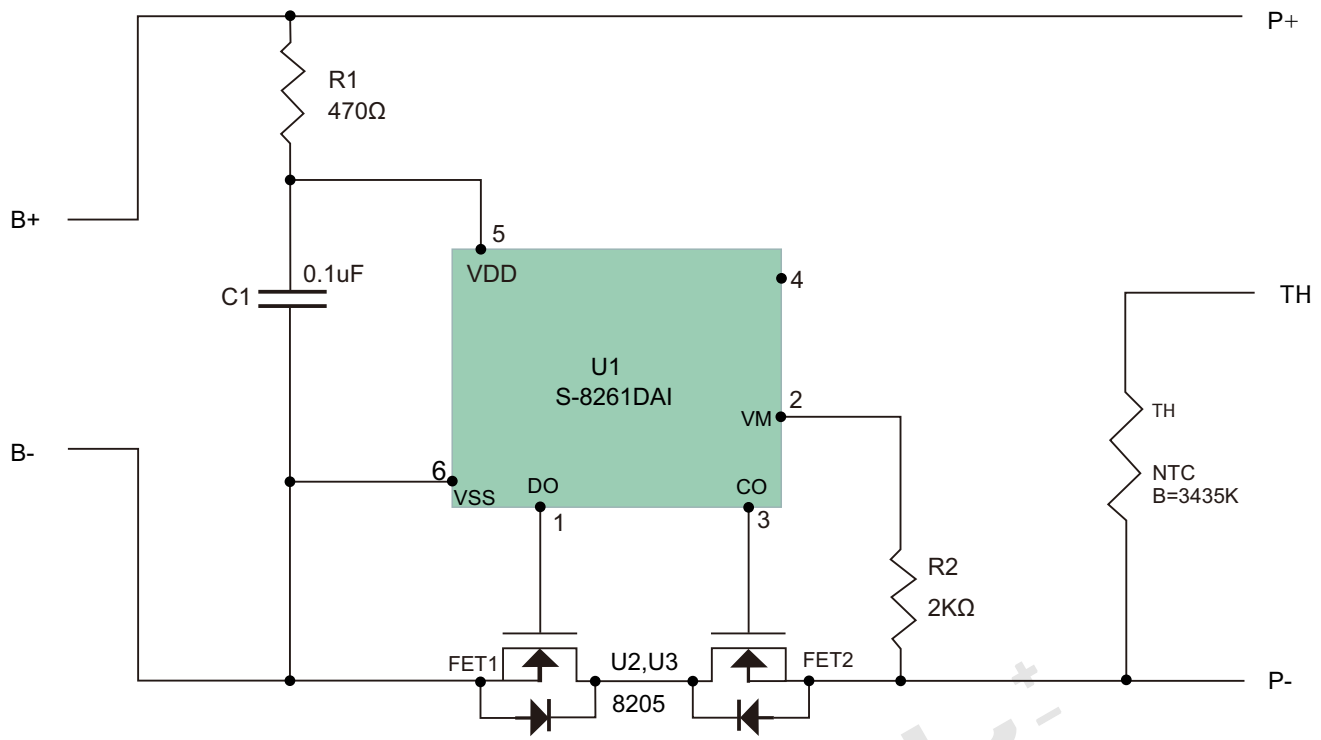

11.5 PCM Parameter(Ta=+25℃)

Item	Content	Criteria
Over Charge Protection	Over Charge Detection Voltage	4.28±0.025V
	Over Charge Detection Delay Time	0.7s to 1.3s
	Over Charge Release Voltage	4.18±0.05V
Over Discharge Protection	Over Discharge Detection Voltage	3.0±0.05V
	Over Discharge Detection Delay Time	179.2ms to 332.8ms
	Over Discharge Release Voltage	3.0±0.05V
Over Current Protection	Charge Over Current Detection Delay Time	11.2ms to 20.8ms
	Over Current Detection Current	0.5~6.0A
	Discharge Over Current Detection Delay Time	11.2ms to 20.8ms
	Over Discharge Current Release Condition	Cut load
Short Protection	Detection Delay Time	364μs Max.
	Release Condition	Cut short circuit
	Load Short Circuit Detection Voltage	0.6V±0.1V
Interior Resistance	Main Loop Electrify Resistance	VC=4.2V,RDS≤60mΩ
Current Consumption	Current Consume in Normal Operation	1.5μA Type 4.0μA Max

Copyright ©2010-2018 Honcell Energy. All Rights Reserved.

12. Packing

12.1 Load pallets and cartons

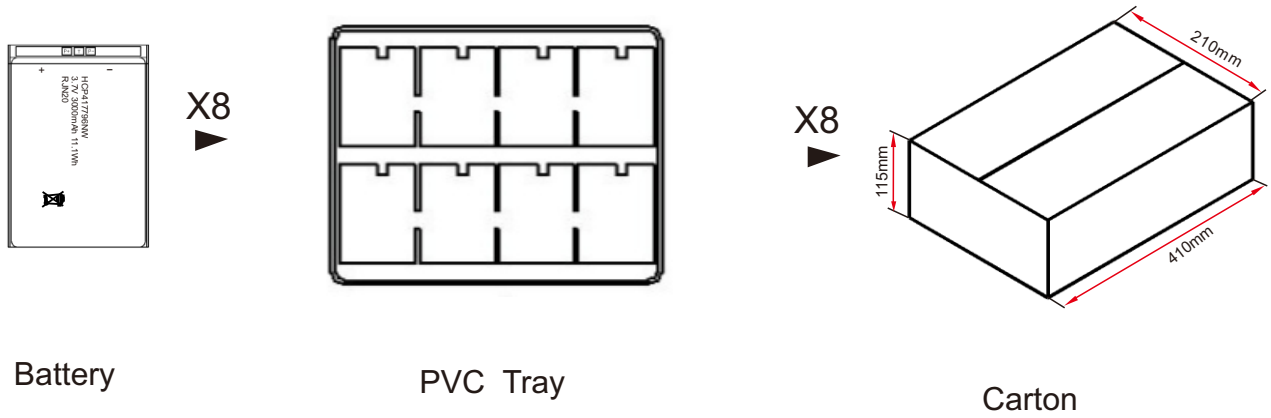

12.2 Affix shipping mark and fire label to the right of the packaged carton.

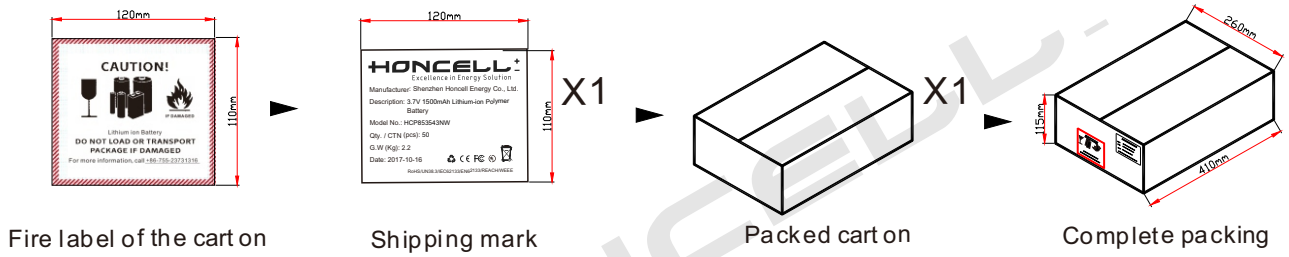

Note: Material size according to the battery size setting.

Copyright ©2010-2018 Honcell Energy. All Rights Reserved.

13. Curves

Charge & Discharge (25°C)

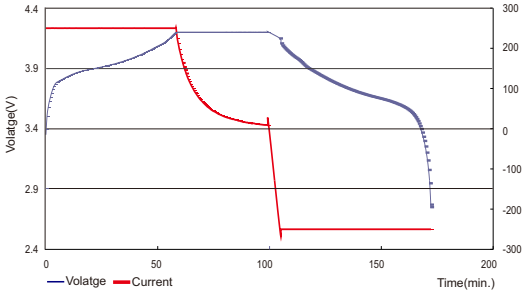

Cycle Life

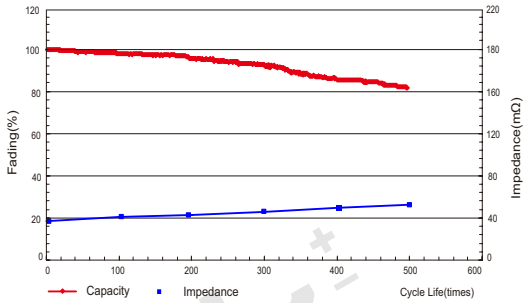

Discharge Characteristics(Tempertature)

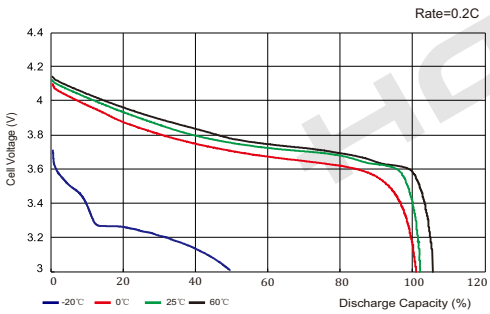

Discharge Characteristics (Rate)

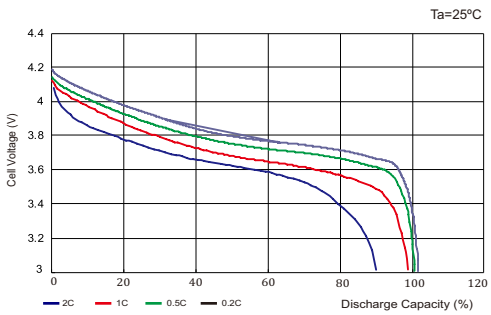

Copyright ©2010-2018 Honcell Energy. All Rights Reserved.

14.Appendix

Preface

This document of "Handling Precautions and Guideline for Li-po Rechargeable Batteries" shall be applied to the batterycells supplied by HONCELL.

Note Ⅰ:

The customer is requested to contact HONCELL in advance, if and when the customer needs other applications or operating conditions than those described in this document. Additional experimentation may be required to verify performance and safety under such conditions.

Note Ⅱ:

HONCELL will take no responsibilities for any accidents when the cell is used under other conditions than those described in this document.

Note Ⅲ:

HONCELL will inform, in a written form, the customer of improvement(s) regarding proper use and handling of the cell, if it is deemed necessary.

14.1 Charging

Always use a charger specifically designed for Lithium ion polymer batteries, but never use other types of chargers to charge Li-po batteries. Failure to do so will damage the batteries and may cause fire and personal injury.

14.1.1 Charging Current:

Charging current should be less than maximum charge current specified in this specification sheet. Charging with higher current than recommended value may cause damage to cell electrical, mechanical and safety performance and could lead to heat generation or leakage.

14.1.2 Charging Voltage:

Charging shall be done by voltage less than that specified in this specification sheet (4.20V/cell). Charging beyond 4.20V,which is the absolute maximum voltage, must be strictly prohibited. The charger shall be designed to comply with this condition. It is very dangerous that charging with higher voltage than maximum voltage specified may cause damage to the cell electrical, mechanical safety performances and could lead to heat generation or leakage.

14.1.3 Charging Temperature:

The cell shall be charged within 0 ºC ~45 ºC ranging in this specification sheet.

14.1.4 Prohibition of Reverse Charging:

Reverse charging is prohibited. The cell must be connected correctly. The polarity has to be confirmed before wiring, In case of the cell is connected improperly, the cell cannot be charged. Simultaneously, the reverse charging may cause damages to the cell which may lead to degradation of cell performances and damage the cell safety, and could cause heat generation or leakage.

14.2 Discharging

14.2.1 Discharging current

The cell shall be discharged at less than the maximum discharge current specified in this specification sheet. High discharging current may reduce the discharging capacity significantly or cause over-heat. If you plan to discharge battery at a higher current than the max current allowed, please consult HONCELL for other recommended solutions.

14.2.2 Discharging temperature

The cell shall be discharged within -20 ºC ~60 ºC range specified in this specification sheet.

Copyright ©2010-2018 Honcell Energy. All Rights Reserved.

14.2.3 Over-discharging

It should be noted that the cell would be at over-discharged state by its self-discharge characteristics in case the cell is not used for long time. Over-discharging may cause loss of cell performances, characteristics or battery functions. In order to prevent the cell over-discharging, the cell shall be charged periodically to maintain between 3.6V and 3.9V. The charger shall be equipped with a device to prevent further discharging exceeding cut-off voltage specified in this specification sheet. Also the charger shall be equipped with a device to control the recharging procedures as follows:

a: The cell or battery pack shall start with a low current 0.1C as pre-charging before rapid charging starts.

b:The rapid charging shall be started after the (individual) cell voltage has been reached above 3.0V can be determined with the use of an appropriate timer for pre-charging. In case the (individual) cell voltage does not rise to 3.0V within the pre-charging time, then the charger shall have functions to stop further charging and display the cell/pack is at abnormal state.

14.3 Protection Circuit Module(PCM)

The cell or battery pack shall be protected by PCM and have the functions of over charge, over discharge and over current prevention to maintain safety and prevent significant deterioration of cell performances

14.3.1 Overcharging Prohibition:

Overcharging prevention function shall stop charging if any one of the cells of the battery pack reaches 4.20V.

14.3.2 Over-discharge Prohibition:

Over-discharging prevention function shall work to avoid further drop in cell voltage of 3.0V or less per cell in any cell of the battery pack. It is recommended that the dissipation current of PCM shall be minimized to 0.5uA or less with the over-discharge prevention. The protection function shall monitor each bank of the battery pack and control the current all the time.

14.4 Storage

Keep the cells in half-charged state to help keep them fully charged or completely discharged. Put the cells in cool and dry place when storing them. The cell shall be storied within -10ºC to 35ºC environmental condition. If the cell has to be storied for a long time unused (over 3 months), need to activate the battery once every 3 months according to the following steps:

1) charge at 0.2C to 4.2V then rest 5 min.

2) discharge at 0.2C to 3.0V then rest 5 min.

3) then charge again at 0.2C to 3.9V

The voltage for a long time storage shall be 3.8V to 3.9V range. The environmental condition is preferred at ambienttemperature 23±2 ºC and relative humidity 65±20%.

14.5 Handling of Cells

Since the Li-po cell is packed in soft package, which can be easily damaged by sharp edge parts such as pins,needles and Ni-tabs, ect., comparing with metal can-cased LIB. To ensure its better performance, it's very important to handle the battery carefully.

1) Avoid any short-circuit. It will cause the leads to get hot and lose electrical functions.

2) Soft package is easily damaged by sharp objects such as needles and knives. Avoid touching the cells with sharpobjects when handling and storing.

3) Next to the leads is the sealed edge. Don't bend or fold the sealing edge as it is sensitive to movement.

4) Don't open the folded edge on the sides of the cell.

5) Don't bend the tabs as the tabs are sensitive.

Copyright ©2010-2018 Honcell Energy. All Rights Reserved.

6) Avoid mechanical shock to the cells.
7) Don't put the cells into an oven, washing machine or any high-voltage container.
8) Don't use a charger without a safety certification. Use only a recommended charger.
9) You should immediately stop charging if the cell overheats, emits an odor, changes color, changes shape, etc.
10) The children should be supervised by adults when using the batteries.
11) Before using batteries, please carefully read and understand the Handling Precautions and Safety Guidelines.
12) Avoid electro-static discharge when using, charging, and storing cells.
13) Avoid putting the battery in contact with metal conductors such as neck chains, barrettes, or bolts, etc.
14) Don't use metal conductors to connect the positive and negative leads together.
15) Avoid errors during assembly by contacting the positive lead with the negative lead.
16) Keep away batteries from children.
17) The cells/batteries are requested to be stored within a proper temperature range specified in this specifications.
18) Do not store batteries in a manner that allow terminals to short circuit.
19) Do not place batteries near heating sources, nor exposed to direct sunlight for long periods. Elevated temperatures can result in reduced battery service life.

14.5.1 Soft Aluminum Foil

The soft aluminum packing foil is very easily damaged by sharp edge parts such as Ni-tabs, pins and needles.

1) Don't strike battery with any sharp edge parts.
2) Trim your nail or wear glove before taking battery.
3) Clean worktable to make sure no any sharp particle .

14.5.2 Sealed Edge

1) Sealing edge is very flimsy.
2) Don't bend or fold sealing edge.

14.5.3 Folding Edge

1) The folding edge is formed in battery process and passed all hermetic test.
2) Don't open or deform folding edge.

14.5.4 Tabs

1) The battery tabs are not so stubborn especially for aluminum tab.
2) Don't bend tab.

14.5.5 Mechanical Shock

Don't fall, hit and/or bend the battery body.

14.5.6 Short

Short terminals of battery is strictly prohibited since it may cause severe damages to the battery.

14.6 Notice for Designing Battery Pack

14.6.1 Pack Designs

1) Battery pack should have sufficient strength and the cell should be protected from mechanical shock.
2) No Sharp edge components should be inside the pack containing the battery.

14.6.2 PCM Designs

1) The overcharge threshold voltage should not be exceed 4.20V.
2) The over-discharge threshold voltage should not be lower than 3.0V.
3) The PCM should have short protection function built inside.

Copyright ©2010-2018 Honcell Energy. All Rights Reserved.

14.7 Notice for Assembling Battery Pack

14.7.1 Tab Connection

1) Ultrasonic welding or spot welding is recommended to connect battery with PCM or other parts.
2) If apply manual soldering methods to connect tab with PCM, Notices below are very important to ensure battery performances:
   a. The soldering iron should be temperature controlled and ESD safe.
   b. Soldering temperature should not exceed 300 ºC.
   c. Soldering time should not be longer than 3 seconds.
   d. Soldering time should not exceed 5 times.
   e. Keep battery tab cold down before next time soldering.
   f. Do not directly heat cell body, this may cause the battery damaged by heat above 90ºC.

14.7.2 Cell Fixing

1) The cell should be fixed to the battery pack by its largest surface area.
2) There should be no sharp edges at the assembly contact area.
3) Cells must be held firmly in the battery pack, and movement is not allowed.

14.8 Prohibitions

14.8.1 Prevention of Short Circuit Within a Battery Pack

Enough insulation layers between wiring and the cells shall be used to maintain extra safety protection.

14.8.2 Prohibition of Disassembly

Never disassemble the cells, should a battery unintentionally be crushed, thus releasing its contents, rubber gloves must be used to handle all battery components. Avoid inhalation of any vapors that may be emitted.

1) The disassembling may generate internal short circuit in the cell, which may cause gassing, firing, or other problems.
2) Electrolyte is harmful. Li-po battery should not have liquid from electrolyte flowing. In case of contacting the materials from a damaged or ruptured cell or battery, please follow the emergent instructions as below:
   a. Eye Contact: wash immediately with plenty of water and soap or for at least 15 minutes.
   b. Skin Contact: wash immediately with water and soap.
   c. Inhalation of vented gas: remove to fresh air.
   d. Ingestion: get medical attention immediately.

14.8.3 Prohibition of Dumping of Cells into Fire

Never incinerate nor dispose the cells in fire. These may cause firing of the cells, which is very dangerous and is prohibited.

14.8.4 Prohibition of Cells Immersion into Liquid

The cells shall never be soaked with liquids such as water, seawater drinks such as soft drinks, juices, coffee or others.

14.8.5 Battery cells Replacement

The battery replacement shall be done only by Honcell and never by users.

14.8.6 Prohibition of Use of Damaged Cells

The cells might be damaged during shipping by shock. If any abnormal features of the cells are found such as damages in a plastic envelop of the cell, deformation of the cell package, smelling of electrolyte, electrolyte leakage and others, the cells shall never be used any more. The cells with a smell of the electrolyte or a leakage shall be placed away from fire to avoid firing.

Copyright ©2010-2018 Honcell Energy. All Rights Reserved.

14.9 Recommended Notice:

1) Using cells on specified facilities only.
2) Using cells in normal ambient temperature range specified in this sheet, and at relative humidity 65±20%.
3) Using the cells, away from heat source. Don't let children play with cells. Don't drop cells. Charge cells with specified charger.
4) Avoid the positive pole shortcutting with the negative one. Avoid the cells affected with damp.
5) Don't drop cell into the water or fire.
6) If the cell isn't used for a long time, please keep the cells in a half-charged state neither fully charged nor completely discharged. Recharge the cells and use half of the power after 2-3 months. Store the cells in a cool and dry place, this will protect the cell from damaging.
7) If any matters with this specification arises, it shall be revised by mutual agreements.

14.10 Warranty

Honcell warrants its battery to be free of defects in material and workmanship. Batteries are manufactured in accordance with Honcell's specification. Honcell warrants only to the original user that all batteries will be free of defects in material and workmanship for a period of twelve months. The applicable warranty period begins from the date of shipping, or if no obvious evidence is available to state the shipping date, refer to the date code on the product. In no case shall Honcell's liability with defects proven due to manufacturing process instead of the customers abuse and/or misuse. Charges for correcting a defective battery will not be allowed nor will Honcell accepts batteries returned for credit or exchange unless Honcell authorizes the correction or return in written form. The warranty does not cover a battery reaching its normal end of life which may occur prior to the warranty periods stated above. A Battery can deliver only a fixed number of usable amp-hours over its lifetime and is considered to have reached its normal end of life if the application uses up all of these amp-hours, regardless of the time the Battery has been in service.

14.11 Precautions

To prevent the possibility of the battery from leaking, heating and or fire, please note the following precautions:

1) Do not strike battery with any sharp edge parts. The soft aluminum packing foil is easily damaged by sharp edge parts such as Ni-tabs, pins, knives and or needles, ect.
2) Do not immerse the battery in water or any other liquids.
3) Do not use and leave the battery near a heat source as fire or heater.
4) Do not reverse the position and negative terminals.
5) Do not let exposed battery wires touch each other. This may cause the battery to short and potentially cause a fire.
6) Do not connect the battery to an electrical outlet.
7) Do not discard the battery in fire or heat it.
8) Do not charge if a battery is deformed, swollen or appears damaged. Follow the disposal instructions below, and dispose the battery properly and safely.
9) Do not bend the tabs since they are easily to be broken, especially the aluminum tab.
10) Do not short-circuit the battery by directly connecting the positive and negative terminal with metal conductive objects.
11) Do not transport and store the battery together with metal objects such as necklaces, hairpins etc.
12) Do not strike, throw or trample the battery.
13) Do not pierce the battery with a nail or other sharp objects.
14) Do not use or leave the battery at very high temperature ,for example, at strong direct sunlight or a vehicle inextremely hot conditions, otherwise, it can overheat or fire or its performances will be degenerate and its service life will be decreased.
15) Do not charge batteries on wood, cloth, carpet, in your model, or on any other flammable material. Keep a chemical fire extinguisher nearby in case of fire.

Copyright ©2010-2018 Honcell Energy. All Rights Reserved.

16) Do not use it in a location where static electricity is great, otherwise, the safety devices may be damaged causing hidden trouble of safety.
17) Do not rub eyes if the electrolyte get into eyes but rinse them with clean running water and immediately seek medical attention instead.
18) Store battery packs out of the reach of children and pets.
19) Immediately remove the cell from the device or battery charge and stop using it if the it gives off an odor, generates heat, becomes discolored or deformed, or in any way appear abnormal during use, recharging or storage.
20) Clean the terminals with a dry cloth before using in case of the terminals are dirty. Otherwise power or charge failure may occur due to the poor connection with the instrument.
21) The new cells are prohibited using from the old ones or other brands.
22) Be aware of the discharged battery may cause fire or smoke, tape the terminals to insulate.
23) Mixed cells using from different manufacturers is prohibited.
24) Never leave batteries unattended while charging. Always observe batteries when charging so that you may react quickly to any problems that may occur.
25) Any time you have an accident with your model or if the battery swells "balloons" or if the battery exceeds temperature guidelines, follow these safety steps:
a. Immediately remove the battery pack from your model or charger.
b. Place the battery in a non-flammable and well ventilated area.
c. Observe the battery for 30 minutes from a safe distance.
d. After 30 minutes, if the pack appears stable not swollen and shows no signs of damage, return the battery.
e. pack to normal use with caution.

14.12 Battery Disposal Instructions

1. Discharge battery pack to 3.0 Volts per cell or less.
2. Fill a bucket with enough water to submerge the battery pack completely.
3. Add salt to the water until no more salt will dissolve; the water is now saturated with salt.
4. Place the battery pack in the bucket and leave submerged in the salt water solution for 24 hours.
5. Remove the battery pack from the salt water and test the voltage.
6. If the voltage does not read 0 Volts, re-submerge and re-test until the voltage reads 0 Volts.
7. Once the battery pack has been discharged to 0 Volts, it is safe to dispose.

14.13 Warning

Charging and discharging batteries has the potential for fire, serious injury to persons and damages to property. The user of this battery agrees to accept responsibility for all such risks. HONCELL can't control the use, application, charging or installation of this product and shall not be held responsible for any accident, injury to persons, or damage to property resulting from the misuse and/or abuse of this product. Read all safety guidelines, charging instructions, and battery disposal instructions on the inside of this specification sheet before using batteries. Keep batteries out of reach of children and pets. Children under the age of 18 must be supervised by a responsible adult. By purchasing HONCELL's products, buyer shall assume all risks associated with Li-po batteries.

14.14 Others

Any matters that this specification sheet does not cover should be conferred between the customer and HONCELL. This document may contain technical inaccuracies or typographical errors, and you should confirm the accuracy and completeness of all information before making any decisions related to the products you are to test, buy or use.

Copyright ©2010-2018 Honcell Energy. All Rights Reserved.